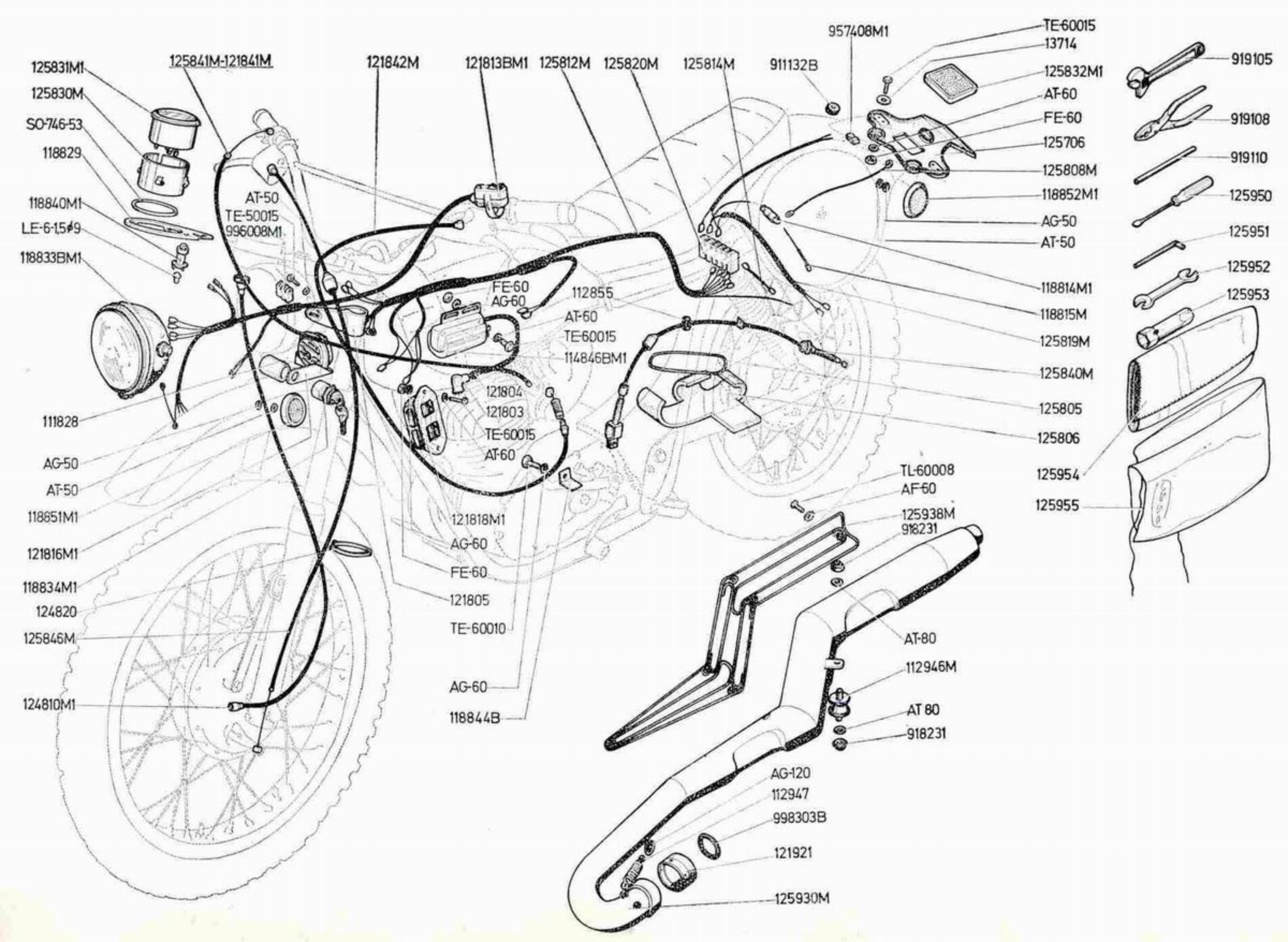
125831M1
125830M
SO-746-53
118829
118840M1
LE-6-1,5x9
118833BM1
111828
AG-50
AT-50
118851M1
121816M1
118834M1
124820
125846M
124810M1
125841M-121841M
AT-50
TE-50015
996008M1
121842M
121813BM1
125812M
125820M
125814M
911132B
957408M1
FE-60
AG-60
112855
AT-60
TE-60015
114846BM1
121804
121803
TE-60015
AT-60
121818M1
AG-60
FE-60
121805
TE-60010
AG-60
118844B
TE-60015
13714
125832M1
AT-60
FE-60
125706
125808M
118852M1
AG-50
AT-50
118814M1
118815M
125819M
125840M
125805
125806
TL-60008
AF-60
125938M
918231
AT-80
112946M
AT 80
918231
AG-120
112947
998303B
121921
125930M
919105
919108
919110
125950
125951
125952
125953
125954
125955

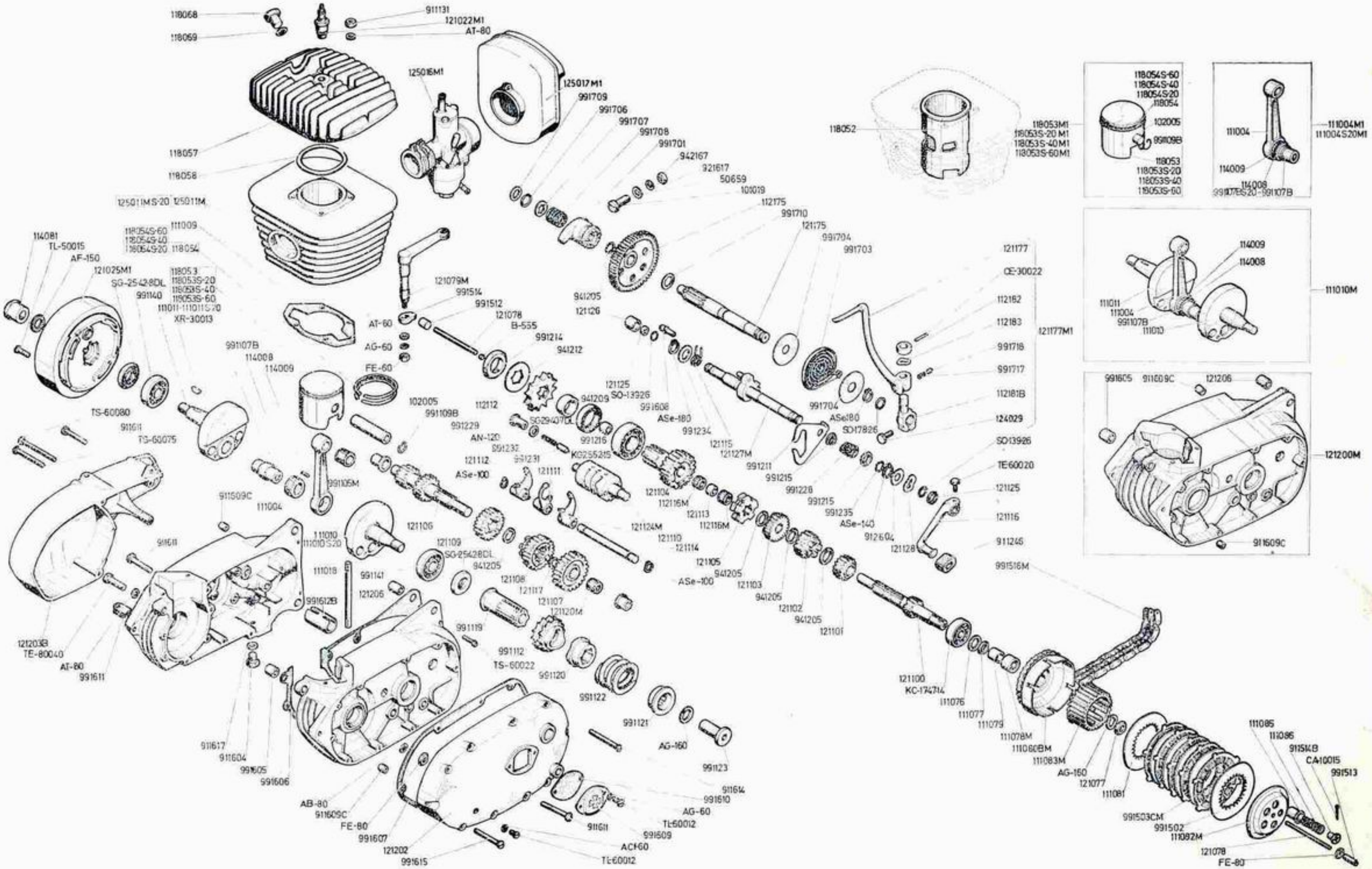
118068
118069
911131
121022M1
AT-80
125016M1
125017M1
991709
991706
991707
991708
991701
942167
921617
50659
108019
112175
991710
121175
991704
991703
118057
118058
125011MS-20
125011M
111009
118054S-60
118054S-40
118054S-20
118054
114081
TL-50015
AF-150
121025M1
SG-25428DL
991140
118053
118053S-20
118053S-40
118053S-60
111011-111011S-20
XR-30013
121079M
991514
991512
121078
B-555
991214
941212
AT-60
AG-60
FE-60
991107B
114008
114009
TS-60080
991611
TS-60075
102005
991109B
112112
991229
AN-120
991237
991231
121112
ASe-100
991105M
911509C
111004
111010
111010S-20
121106
121109
SG-25428DL
941205
111018
991141
121206
991612B
121203B
TE-80040
AT-80
991611
911617
911604
991605
991606
AB-80
911609C
FE-80
991607
121202
991615
991119
991112
TS-60022
991120
991122
991121
AG-160
991123
991614
991610
AG-60
TE60012
991609
AC-160
TE60012
991611
941205
121126
121125
SO-13926
941209
991608
ASe-180
991234
SG29407DL
991216
KG255215
121115
121127M
991211
991215
991228
991215
991235
ASe-140
912604
121128
121104
112116M
121113
112116M
121124M
121110
121114
121105
ASe-100
121103
941205
121102
941205
121101
121100
KC-174714
111076
111077
111079
111078M
111060BM
111083M
AG-160
121077
111081
991503CM
991502
111092M
121078
FE-80
111085
111086
911514B
CA10015
991513
118052
118053M1
118053S-20 M1
118053S-40 M1
118053S-60 M1
118054S-60
118054S-40
118054S-20
118054
102005
991109B
118053
118053S-20
118053S-40
118053S-60
111004
114009
114008
991107BS-20
991107B
111004M1
111004S20M1
114009
114008
111011
111004
991107B
111010
111010M
991605
911609C
121206
121200M
911609C
121177
OE-30022
112182
112183
121177M1
991718
991717
112181B
124029
SO13926
TE60020
121125
121116
911246
991516M
991704
ASe180
SO17826

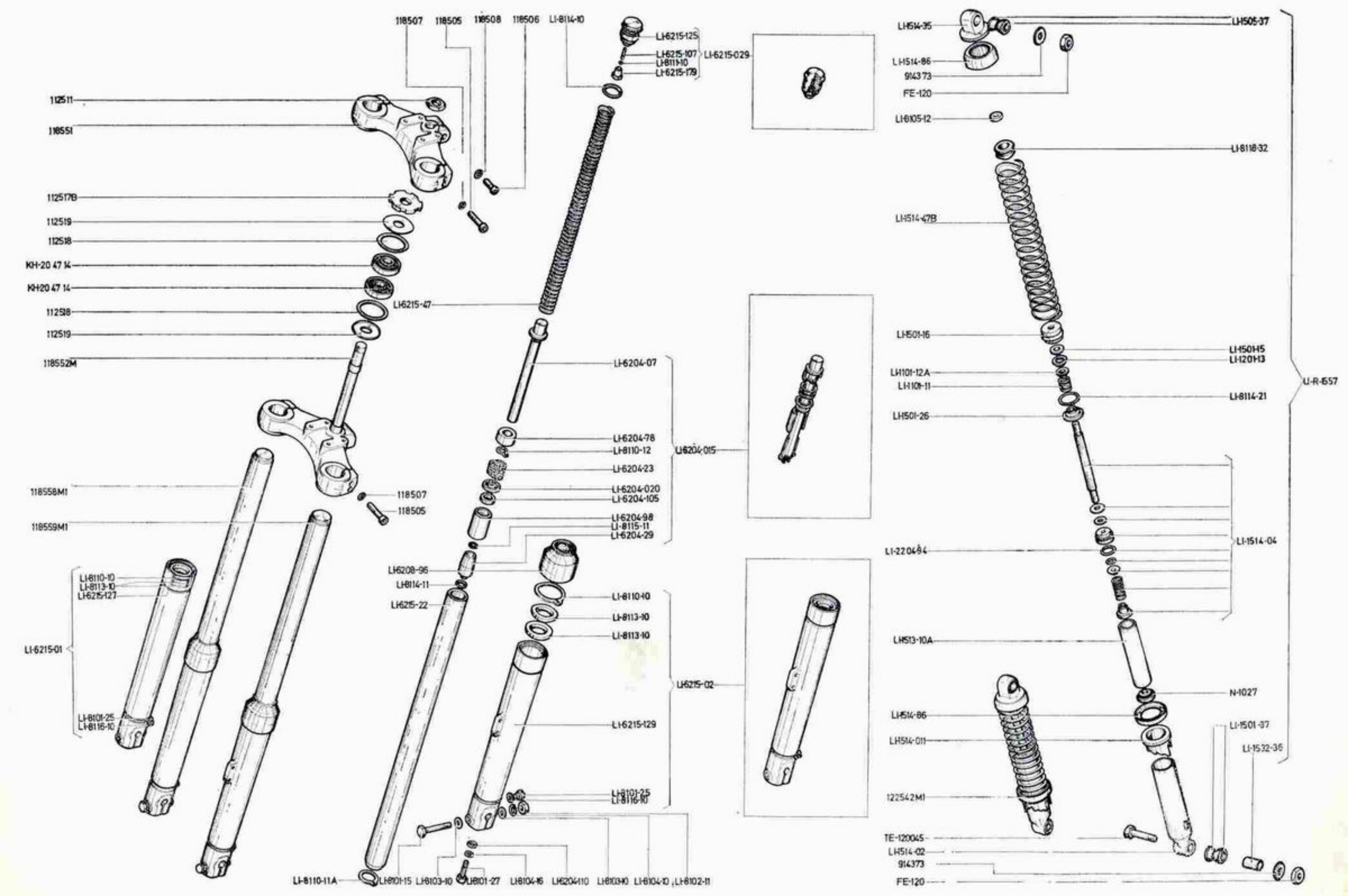
118507
118505
118508
118506
LI-8114-10
LI-6215-125
LI-6215-107
LI-8111-10
LI-6215-179
LI-6215-029
LH514-35
LH505-37
LH514-86
914373
FE-120
LH6105-12
112511
118551
LI-8118-32
112517B
112519
112518
KH-20 47 14
KH-20 47 14
112518
112519
118552M
LI-6215-47
LH514-47B
LH501-16
LH501H5
LH120H3
LH101-12A
LH101-11
LI-8114-21
LI-R-657
LH501-26
LI-6204-07
LI-6204-78
LI-8110-12
LI-6204-23
LI-6204-020
LI-6204-105
LI-6204-98
LI-8115-11
LI-6204-29
LI-6204-015
118558M1
118507
118505
118559M1
LI-1514-04
LI-220484
LH6208-96
LH8114-11
LH6215-22
LI-8110-10
LI-8113-10
LI-8113-10
LI-6110-10
LI-8113-10
LI-6215-127
LI-6215-01
LH513-10A
LH6215-02
N-1027
LI-6215-129
LH514-86
LH514-011
LI-1501-37
LI-1532-36
LI-8101-25
LI-8116-10
122542M1
LI-8101-25
LI-8116-10
TE-120045
LH514-02
914373
FE-120
LI-8110-11A
LI-8101-15
LI-8103-10
LI-8101-27
LI-8104-16
LI-6204-110
LI-8103-10
LI-8104-10
LI-8102-11

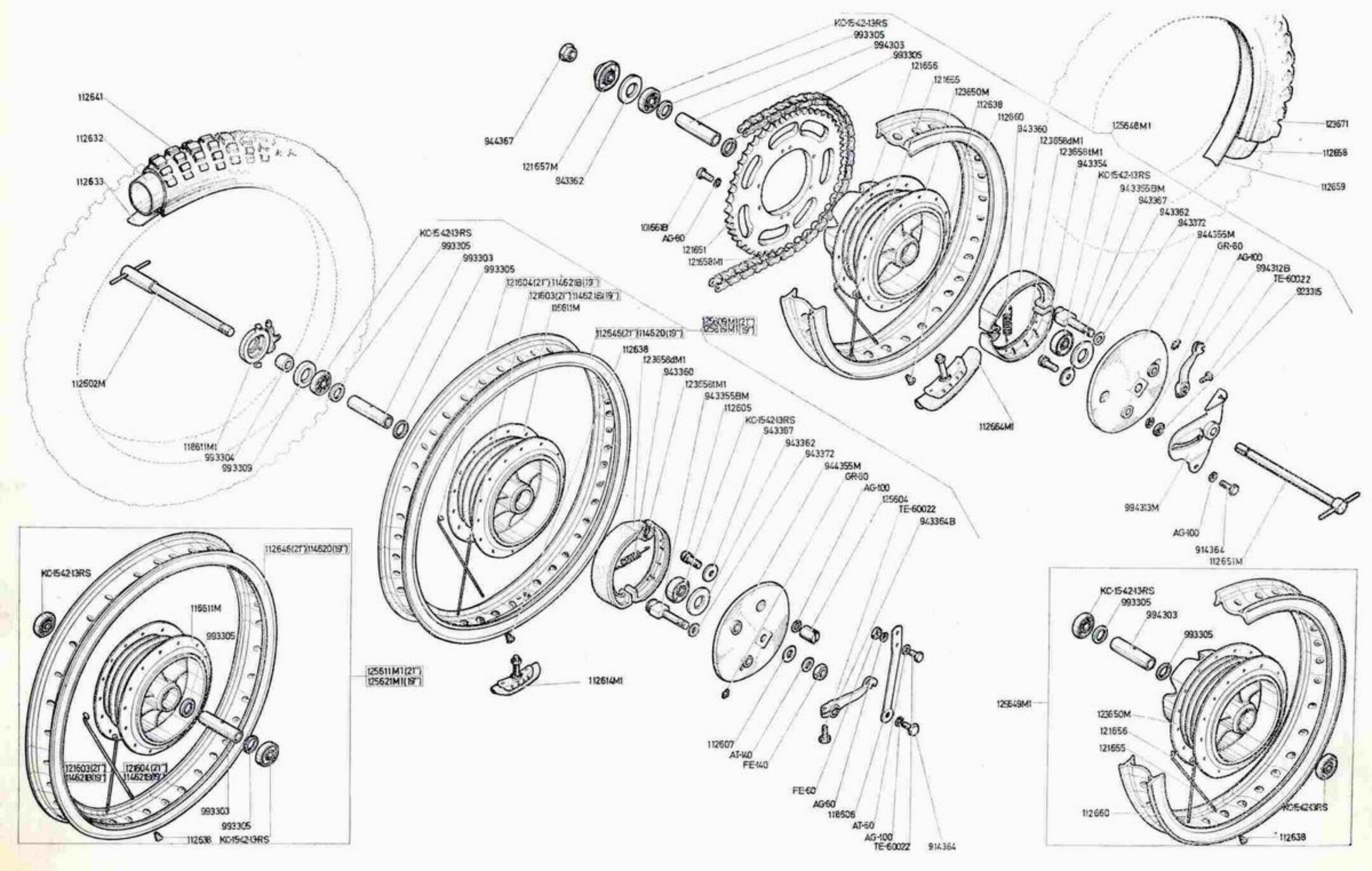
KC-154213RS
993305
994303
993305
121656
121655
123650M
112638
112660
943360
123658dM1
123658tM1
943354
KC-154213RS
943355BM
943367
943362
943372
944355M
GR-60
AG-100
994312B
TE-60022
923315
125648M1
123671
112658
112659
112641
112632
112633
944367
121657M
943362
101661B
AG-60
121651
123658tM1
KC-154213RS
993305
993303
993305
121604(21")114621B(19")
121603(21")114621B(19")
125611M
125609M(21")
125621M1(19")
112645(21")114620(19")
112638
123658dM1
943360
123658tM1
943355BM
112605
KC-154213RS
943367
943362
943372
944355M
GR-60
AG-100
125604
TE-60022
943364B
112664M1
112602M
118611M1
993304
993309
994313M
AG-100
914364
112651M
112646(21")114620(19")
KC-154213RS
118611M
993305
125611M1(21")
125621M1(19")
112614M1
121603(21")
114621B(19")
121604(21")
114621B(19")
993303
993305
112638
KC-154213RS
112607
AT-140
FE-140
FE-60
AG-60
118606
AT-60
AG-100
TE-60022
914364
KC-154213RS
993305
994303
993305
125649M1
123650M
121656
121655
112660
KC-154213RS
112638

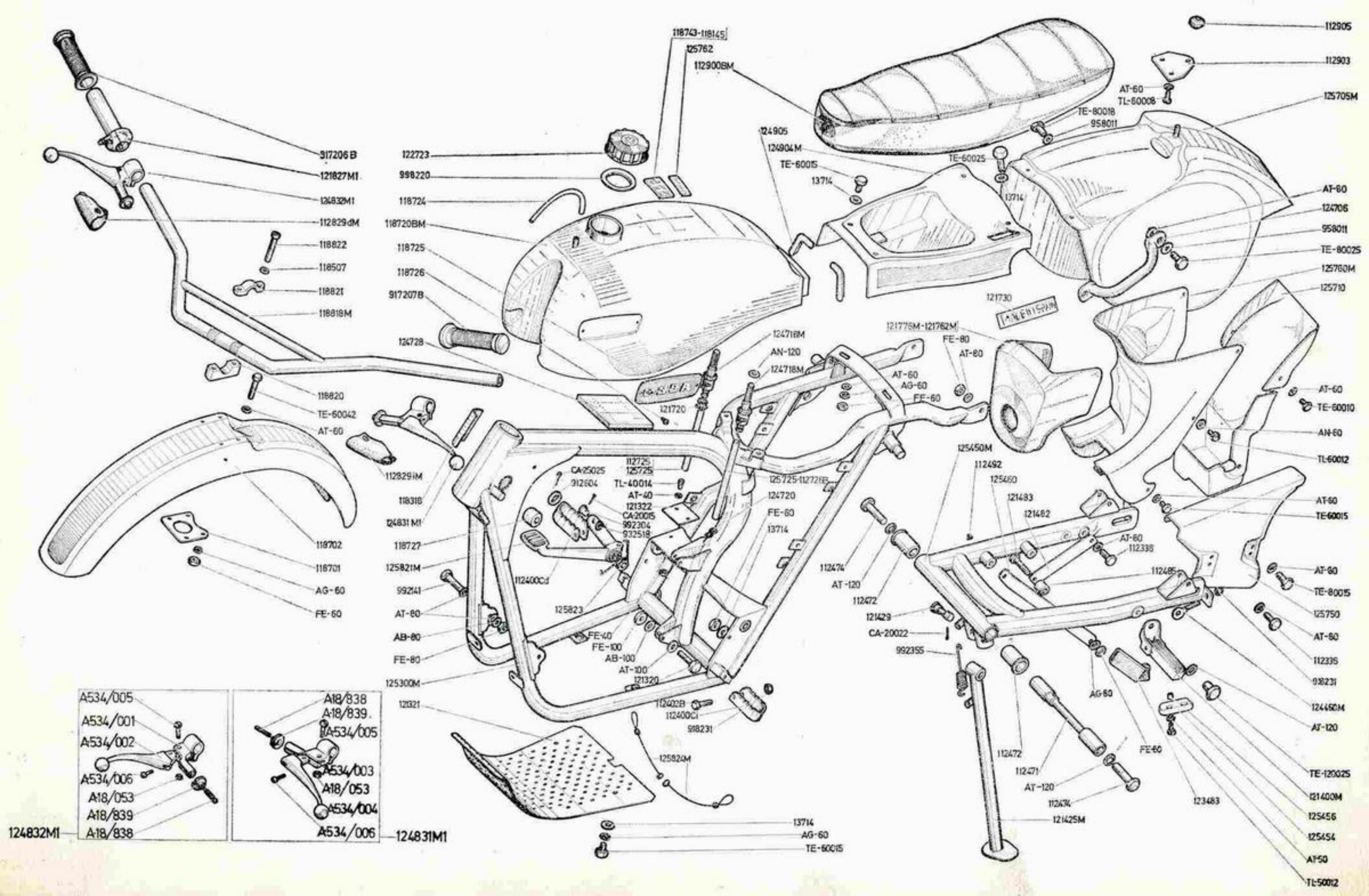
917206 B
121827M1
124832M1
112829dM
118822
118507
118821
118818M
118820
TE-60042
AT-60
112829iM
118318
124831 M1
118702
118701
AG-60
FE-60
122723
998220
118724
118720BM
118725
118726
917207B
124728
118743-118145
125762
112900BM
124905
124904M
TE-60015
13714
TE-60025
13714
112905
112903
AT-60
TL-60008
TE-80018
958011
125705M
AT-60
124706
958011
TE-80025
125760M
125710
121730
121776M-121762M
FE-80
AT-80
124718M
AN-120
124718M
AT-60
AG-60
FE-60
121720
AT-60
TE-60010
AN-60
TL-60012
125450M
112492
125460
121483
121482
AT-60
TE-60015
AT-60
112338
112474
AT-120
112472
112485
AT-60
TE-80015
125750
AT-60
112335
998231
124460M
AT-120
121429
CA-20022
992355
AG-60
FE-60
112472
112471
AT-120
112434
121425M
123483
TE-120025
121400M
125456
125454
AT-50
TL-50012
112725
125725
CA-25025
912604
TL-40014
AT-40
121322
CA-20015
992304
932518
125725-112726B
124720
FE-60
13714
112400Cd
125823
FE-40
FE-100
AB-100
AT-100
121320
112402B
112400Cl
998231
125824M
13714
AG-60
TE-60015
118727
125821M
992141
AT-80
AB-80
FE-80
125300M
121321
A534/005
A534/001
A534/002
A534/006
A18/053
A18/839
A18/838
124832M1
A18/838
A18/839
A534/005
A534/003
A18/053
A534/004
A534/006
124831M1